INSTRUCTION MANUAL

MODEL HCL-9000S
DIGITAL CLAMP TESTER

MULTI

1. FEATURES

* Safe AC current measurement on circuit having internal voltage from AC 80V to AC 23KV.
* Provides wide range of current measurement from AC 0.01A to 600A.
* Useful analog signal data output for the recorder.
* Sealed to withstand water and contaminants
* Provides the smooth and easy clamping for the cable with special made "PUSH TO OPEN" mechanism.

2. CAUTION

* Before operating this instrument, familiarize yourself with instruction outlined in this manual. .

* Always check to make sure that the function switch is set to the proper position.

* To avoid electrical shock, operate this instrument very carefully, especially for the measurement of the circuit with more than AC 1000V.

* As the high voltage circuit is very dangerous, those who do not have such specialized knowledge must not use this instrument.

* Never make measurements for uninsulated conductors or bus bars.

* Do not use this instrument, if you find any damage on the instrument of CT and or body case.

* Through this instrument is sealed to withstand water, avoid the operation of this instrument under heavy rain and humidity for the safety.

* Do not disassemble this instrument.

* When [B] sign appears on the display during the use of this instrument, replace the batteries to new ones, as the operation voltage gets below than normal use for the measurement.

* This model is high precision measuring instrument.
It may cause defect, if the CT part receives damage.

3. CARRY AND STORAGE

* Take care not to drop down the instrument and or not to load heavy weight and or strong shock to the instrument.
* Do not apply chemicals to this instrument.
* Do not leave this instrument on the road and or the place under the direct sunshine during summer and also do not leave it in the high temperature place, such as inside of the car, etc.
* Keep the instrument clean and chose the storage place where is dry and not getting direct sunshine.

4. SPECIFICATION

Measuring method	Dual integration mode
Measuring function	AC line current
Structure	Optically isolated between CT part and display/grip part
Display	3.5 digit LCD, max, reading of 1999 with annunciators
Range	0～20A/600A(50/60Hz)
Ranging	2 manual ranging
Accuracy	23℃±5℃, 80RH or less

Range	Resolution	Accuracy
20A	0.01A	±2.5% rdg ±8 dgt
600A	1A	0～400A±2.5% rdg ±8 dgt 400～600A±3.0% rdg ±8 dgt

Jaw opening capability	35mm ϕ
Low battery indication	CT part: Red LED lamp Display/Grip part: “B” mark on LCD readout
Optical transmission	Infrared LED and photo diode
Over range indication	Blanking of all digits except MSD1 (Except 600A range)
Sampling	2 times/sec
Data hold indication	"DH” mark on LCD readout
Data Output	DC 100mV full scale for 20A range DC 30mV for 600A range Output impedance 10kΩ or less
Insulation resistance	100MΩ or more by DC 1000V insulation tester (Between operation handle and core of CT)
Withstanding voltage	AC 48KV, 1 minute (Between handle and core of CT core)
Limitation of circuit voltage	AC 80V to 23KV
Power supply	CT part: 1.5V("AAA" size) x3 Display/Grip part: 1.5V(“AAA” size) x2
Power consumption	CT part: 5mA Display/Grip part: 3mA
Construct	Water resistance rank Ⅱ (Japanese standard)
Size	70(W) x 550(H) x 48(D)mm (When retracted) 70(W) x 1110(H) x 48(D)mm (When stretched)
Weight	Approx. 800g
Accessories	Carrying case……1 Instruction manual…….1 Batteries……5

5. DIMENTIONS & PANEL

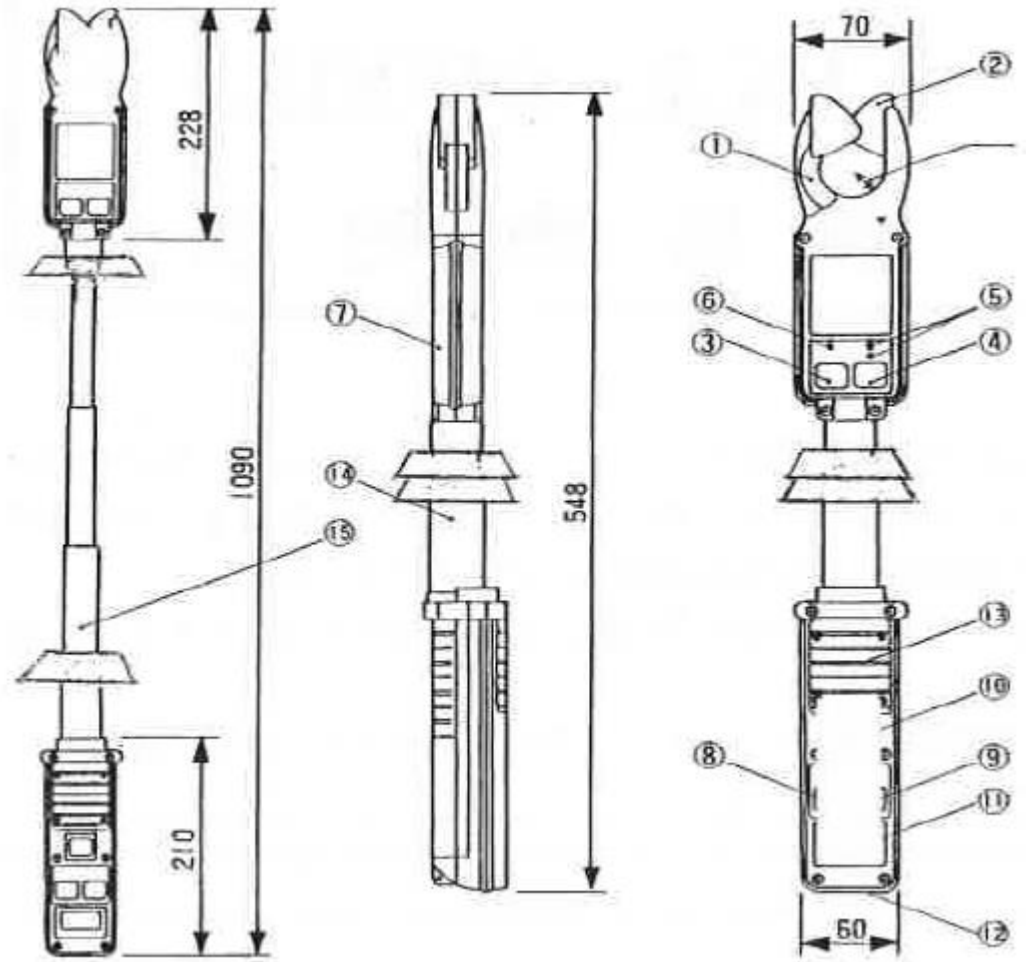

① Current Transducer
② Open/Close Guide for CT
③ Power Switch for CT
④ Range Select Switch for CT
⑤ Range Lamp
⑥ Low Battery Sign Lamp
⑦ Battery Box of CT (back side)
⑧ Power Switch for Body Part
⑨ Range Select Switch for Body Part
⑩ Data Hold Switch
⑪ LCD Display
⑫ Output Terminal for Recorder
⑬ Battery Box of Body Part
⑭ Pipe Stopper
⑮ Stretch/Retractable Pipe

6. METHOD OF MEASUREMENT

6-1. Preparation and Caution before Measurement

* Before making measurements, install the batteries.
* Check if there are no damage or unusualness on the instrument.
* Check the battery by switching the power on.
* Do not change the batteries, keeping clamp of the instrument on the wire.
* Remove the batteries, if the instrument will not be used for a long period of time.
* Do not make measurement with the battery cover off.

6-2. Measurement

1) Push the power switch to ON of the both parts (CT & Body).
2) Set the range select switch to appropriate range to be measured (CT & Body).
3) Clamp CT to the conductor to be measured by pushing open/close guide.
4) In case of measurement in a dark place or in a place where it is difficult to see the readings, use the data hold switch.
5) After measurement, draw out CT from the conductor.
6) Push the power switch to become OFF.

* If you want to make measurement continuously for long period, connect the recorder by using ϕ 2.5 pin jack at the terminal.
  In this case, change the batteries to the new ones before measurement.

* When you make measurement to high voltage conductor, stretch the pipe before the instrument. Do not draw the pipe too strongly. There is possibility for pulling out the pipe, if you do it so much.

* The display value may not become "0" even when there is no input current of the conductor but it is caused from the measuring method & design of this instrument and such phenomenon will not effect on any accuracy of the actual measurement value.

* Do not load any voltage to the terminal of recorder. It may destroy the instrument.

* The instrument may get heat and or damage if the over value current is loaded to the CT. Do not load the current more than 600A.

* Avoid the measurement at the place where 2 wires contact with CT at the same time.

* Do not touch other part of this instrument except grip of the body during measurement.

6-3. Instalment/Replacement of Batteries

1) Confirm the power switch is OFF.
2) Remove the battery covers by the ⊕ driver. (Be careful not to miss the screw cap).
3) Install the batteries according to the indication of battery case.
4) Set up the battery cover and make the screws tightened firmly.
5) Put the screw cap on.

* Do not use the batteries by mixing new & old ones or used ones.

7. TESTING OF WITHSTANDING VOLTAGE

We recommend the testing if withstand voltage by loading 46KV for 1 minute between operation handle and core of CT once a year for the safety.

Manufactured by

MULTI MEASURING INSTRUMENTS CO.,LTD.
Akihabara Murai Bldg., 7F, 1-26 Kanda Sakuma-cho
Chiyoda-ku, Tokyo, 101-0025 Japan
TEL : 81-3-3251-7016 FAX : 81-3-3253-4278
Home Page : http://www.mutimic.com/
E-mail : multi@multimic.com